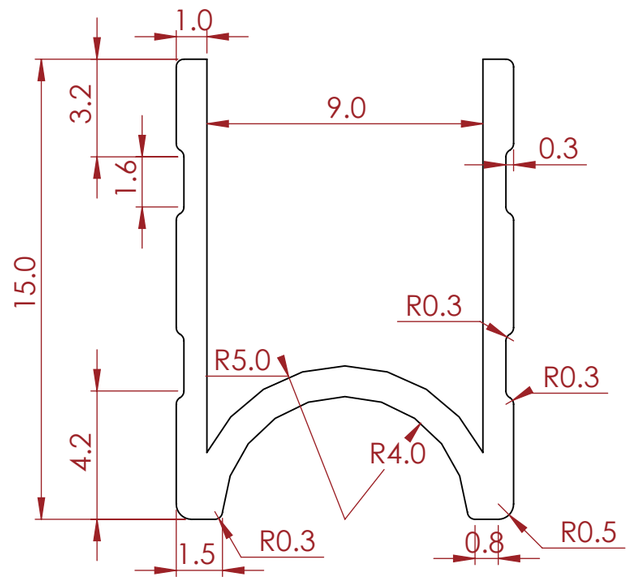

NOTES:

REV	DESCRIPTION	DATE
0	ORIGINAL ISSUE	10/31/2022

HARDWARE WEIGHT
0.11 KG/M

HARDWARE MATERIAL
Aluminum

ITEM CODE:
EXT-E15-G9

DRAWN BY: NU
CHECKED BY: AS

SCALE:
NTS

ARMOR
BUILT TO PROTECT

ADD : 45/7-9 Percy St,Auburn, NSW 2144, Australia
PH : 02 9188 6801
MAIL : sales@armorcases.com.au
WEB : www.armorcases.com.au