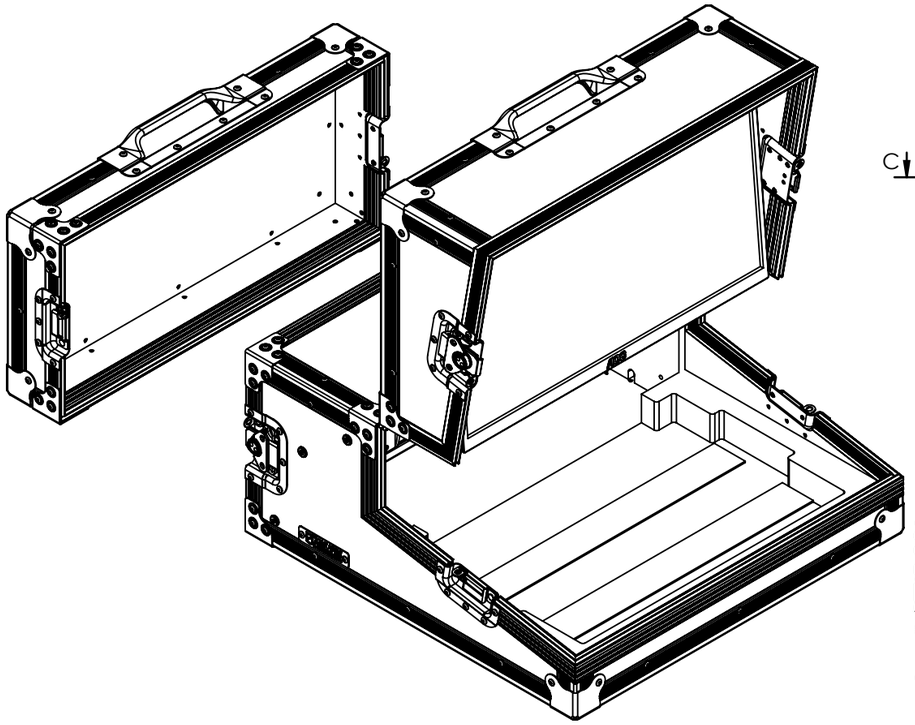

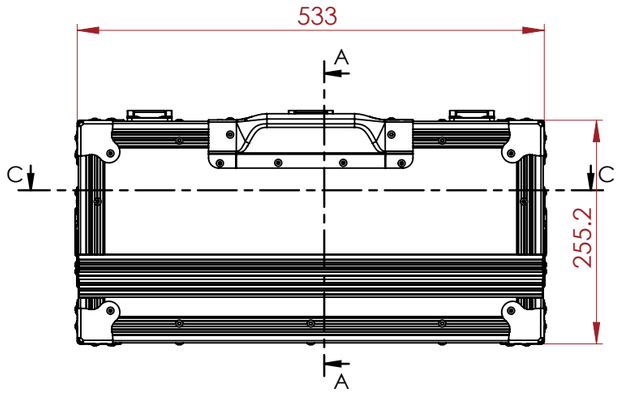

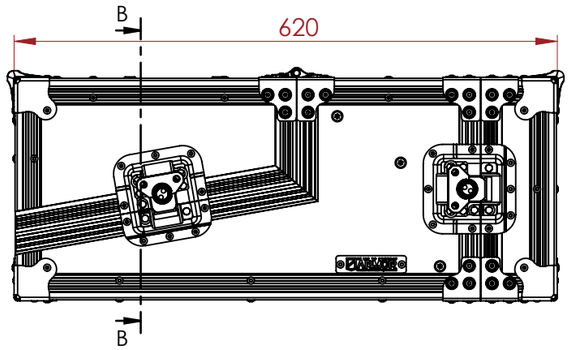

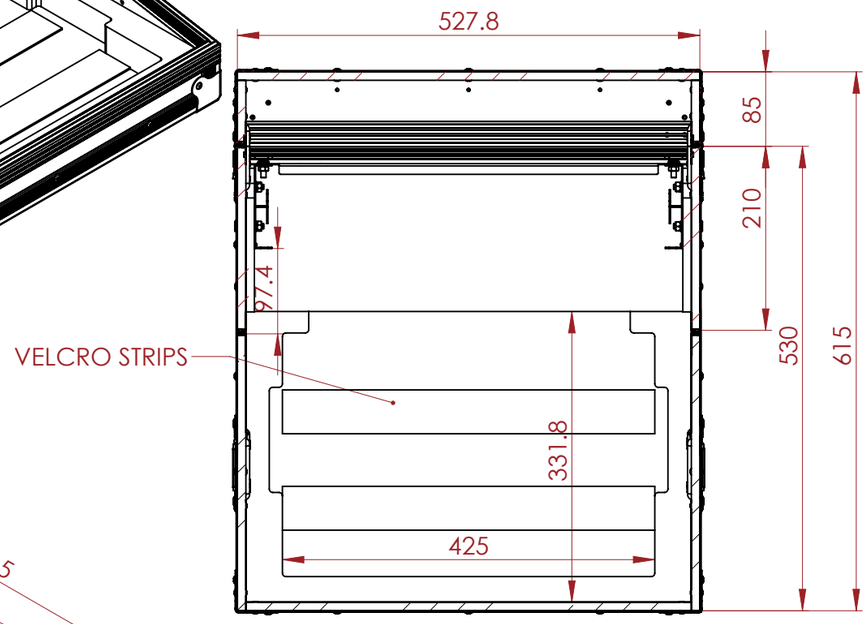

SECTION C-C

EVA FOAM

VELCRO STRIPS

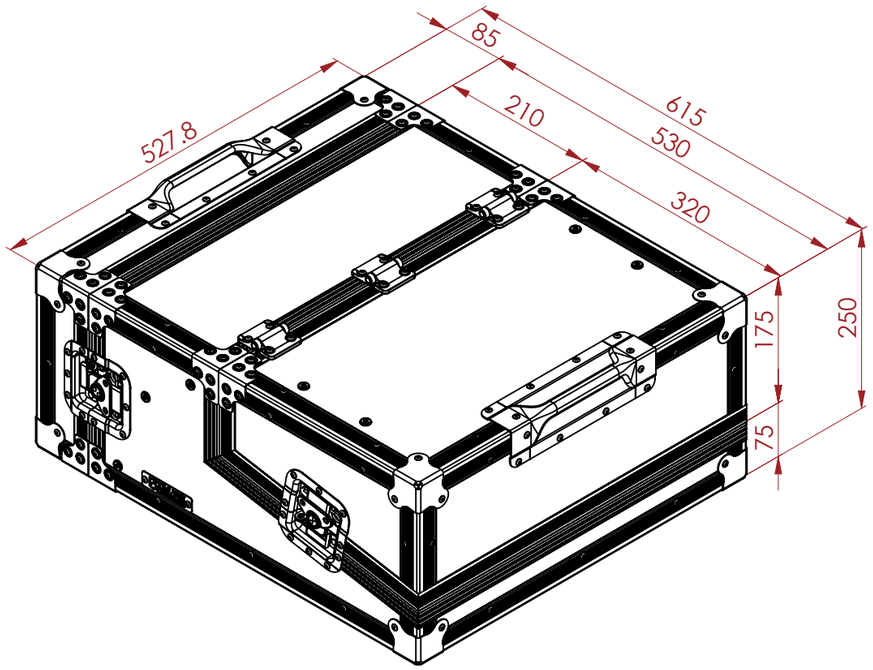

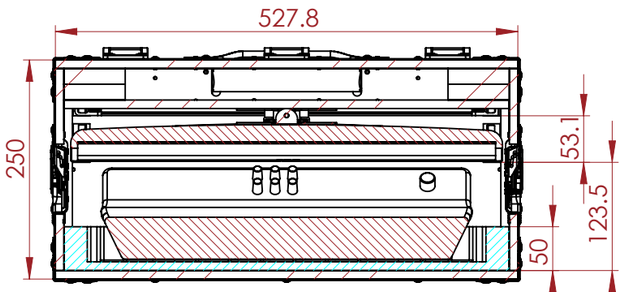

SECTION B-B

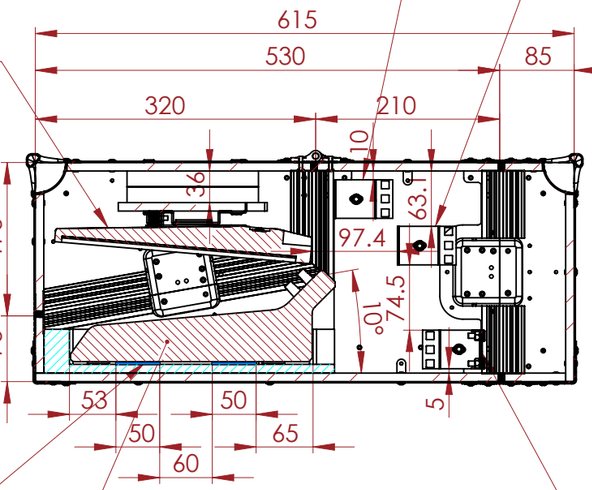

SECTION A-A

NOTES:

ITEMS INCLUDED :
1.Vesa Mount
2.Patch Panel with 8 holes for Type D connectors

ITEMS NOT INCLUDED :
1.Monitor-AOC 22B2H
2.ATEM TV Studio Pro 4k
3.Teranex Mini Rack Shelf

ESTIMATED WEIGHT: 14.7kg	
QUANTITY: 1	
ITEM CODE: SWITCH-ATEM-TVS-01	
DRAWN BY: RP	CHECKED BY: AS
SCALE: NTS	REVISION: 0

ARMOR
BUILT TO PROTECT

ADD : 45/7-9 Percy St,Auburn, NSW 2144, Australia
PH : 02 9188 6801
MAIL : sales@armorcases.com.au
WEB : www.armorcases.com.au