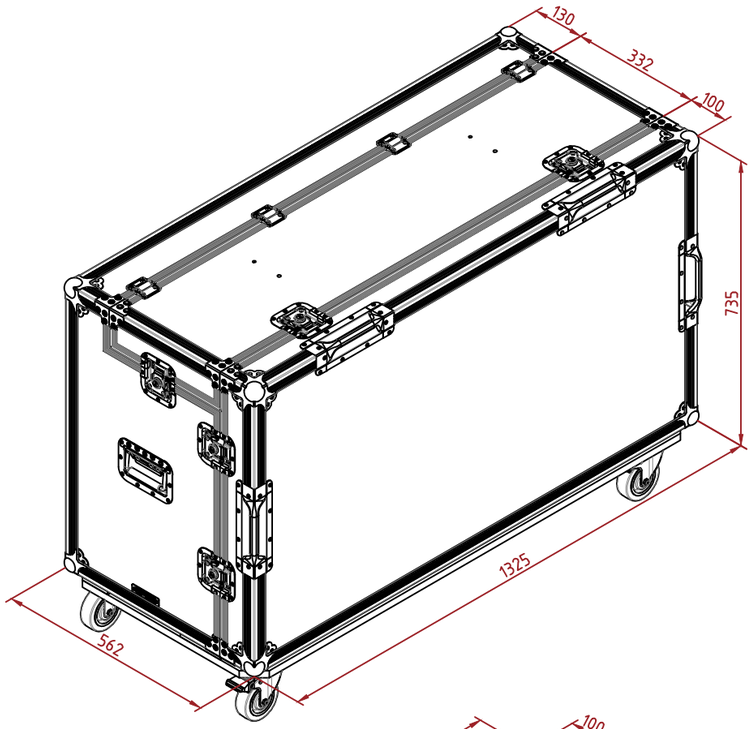

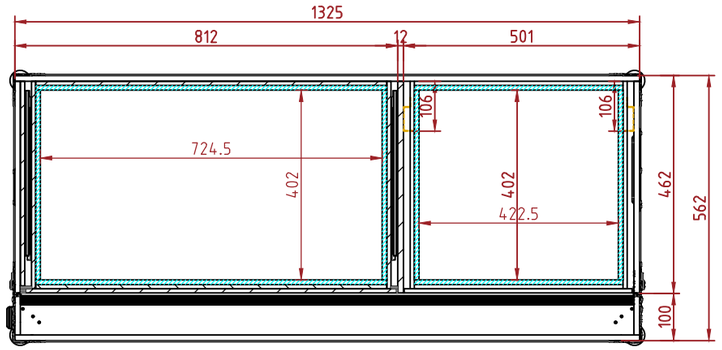

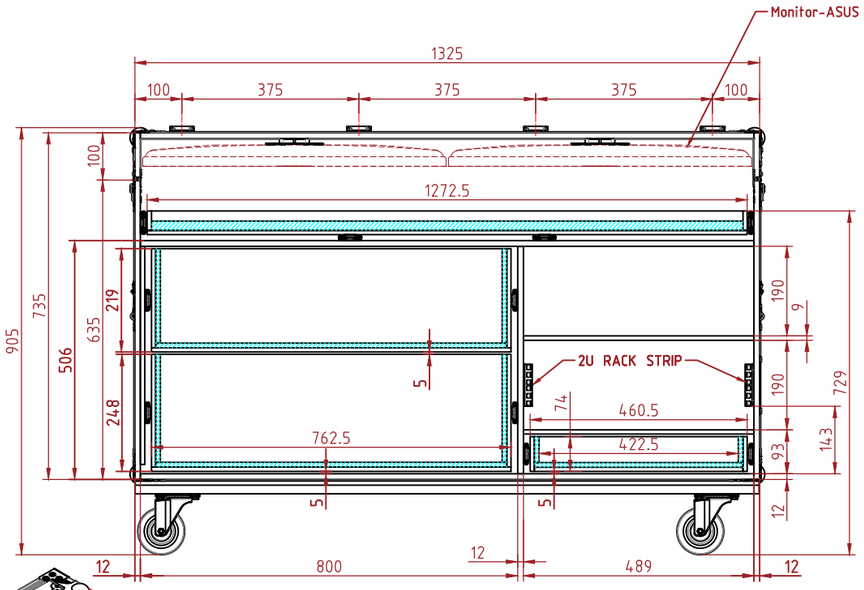

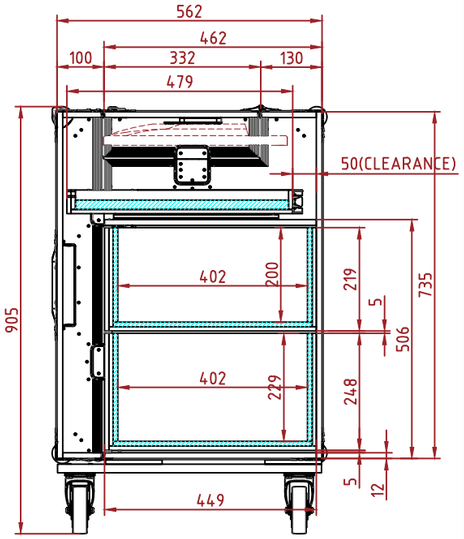

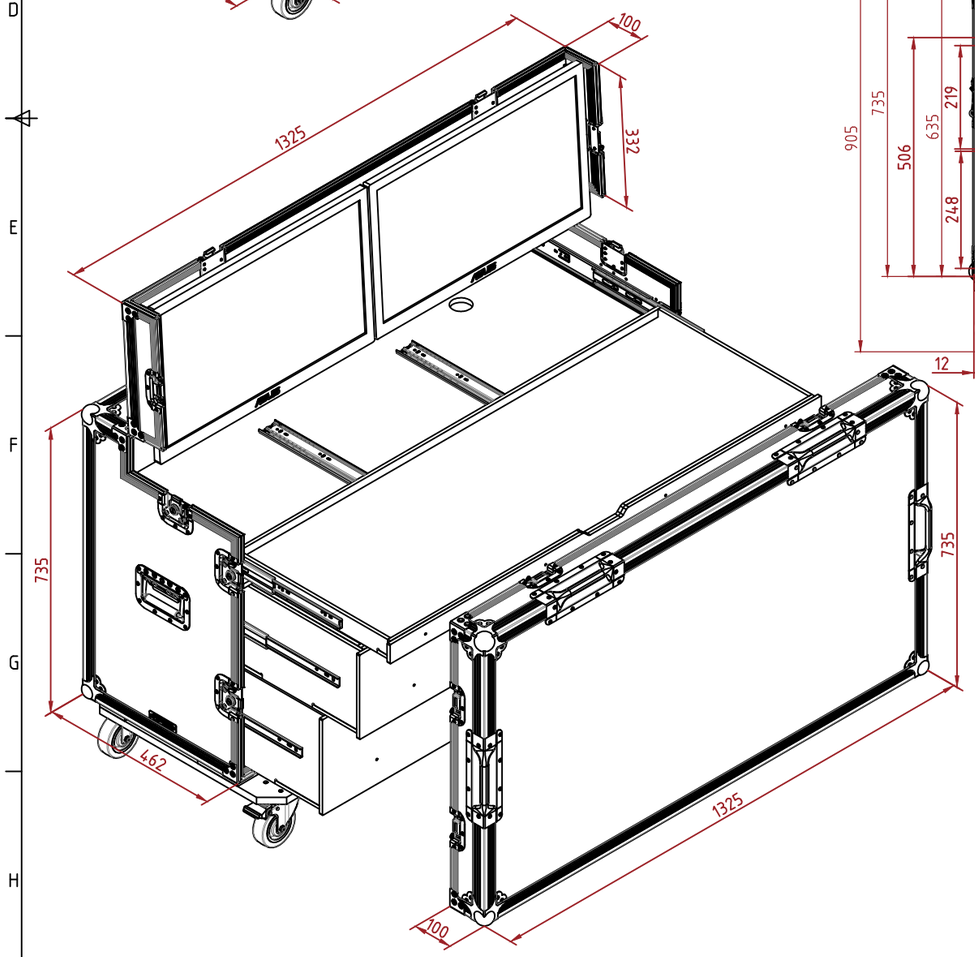

EVA FOAM

ITEM NO.	DESCRIPTION	PART NUMBER	QTY.
1	BRACES	YR-4501	12
2	BALL CORNERS	SY-B35	8
3	LATCHES	L2208	8
4	RECESSED HANDLE	H1101	2
5	CORNER HANDLE	H2026	4
6	PLYWOOD PANEL 9mm	P904	28
7	PLYWOOD PANEL 12mm	P1201A	15
8	PLYWOOD PANEL 18mm	P1801	1
9	SINGLE ANGLE EXTRUSION	E-SA35	10
10	EDGE EXTRUSION	EH12	22
11	U-CAP EXTRUSION	E-U12	4
12	DRAWER SLIDES	R2414Z	6
13	DRAWER SLIDES	RUNNER-50-350	4
14	CASTOR	CARJET S2 100mm SWIVEL	2
15	CASTOR	CARJET S2 100mm SWIVEL WITH BRAKE	2
16	TORQUE HINGE	TH 1.5NM	4
17	PUNCHED DISH	D022	1

NOTES:

CUSTOMER:

DUE DATE:

QUANTITY: 1

PANEL FINISH: P1201A

HARDWARE:

DRAWING: WS-GI Case

DRAWN BY: RP

CHECKED BY: AS

SCALE: 1:13

REVISION: 0

ARMOR
BUILT TO PROTECT

ADD : 45/7-9 Percy St,Auburn,
NSW 2144, Australia
PH : 02 9188 6801
MAIL : sales@armorcases.com.au
WEB : www.armorcases.com.au