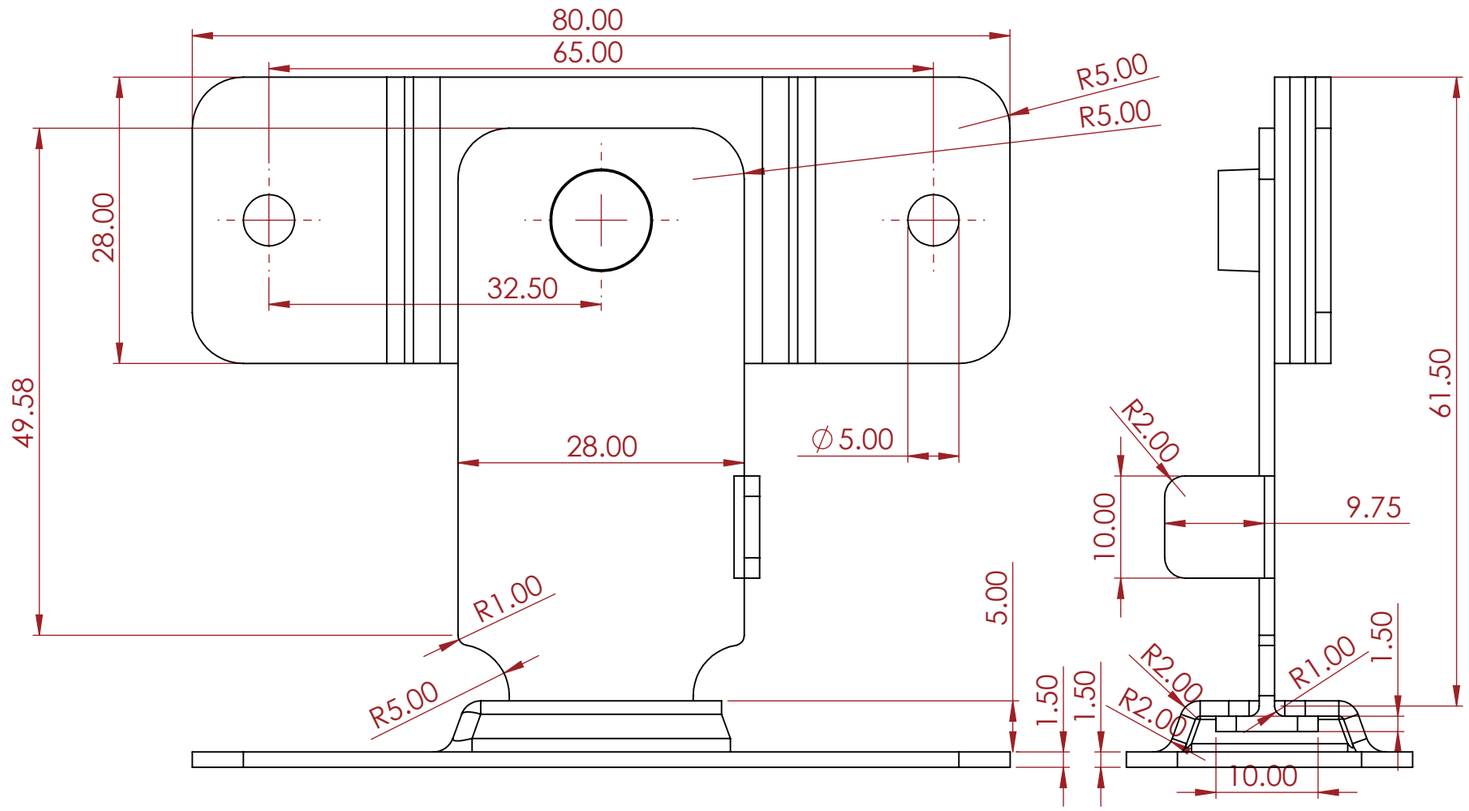

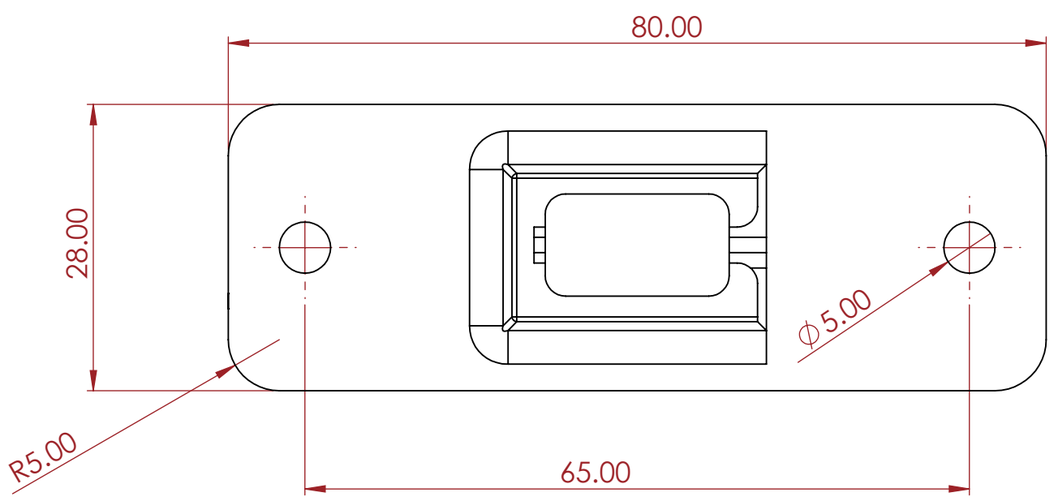

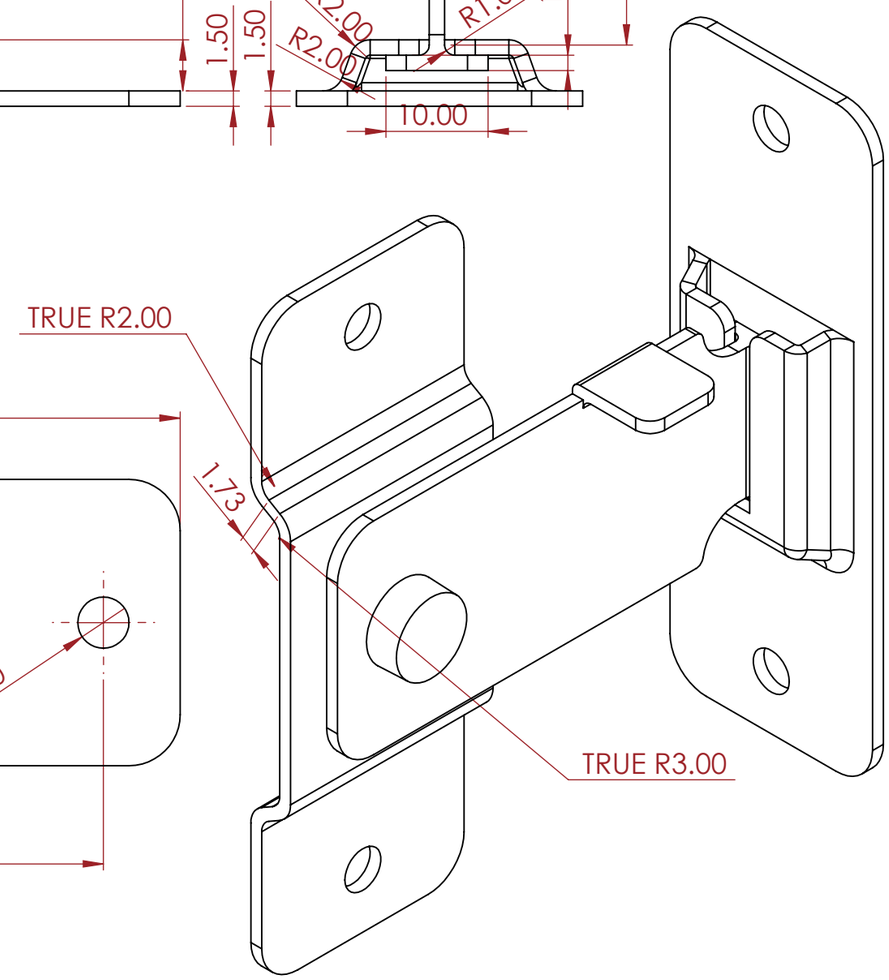

All Dimensions are in Millimeters

DRAWING: L9001	
DRAWN BY: AG	CHECKED BY: AS
SCALE: 1:1	REVISION: 0

ARMOR
BUILT TO PROTECT

ADD : 45/7-9 Percy St,Auburn, NSW 2144, Australia
PH : 02 9188 6801
MAIL : sales@armorcases.com.au
WEB : www.armorcases.com.au